TOA

RACK JOINT BRACKET

MB-25B-J

■DESCRIPTION

The MB-25B-J is used for side-by-side connection of 2-unit size components that are 210 mm in width in an EIA component rack.

■SPECIFICATIONS

Finish	Joint bracket: Steel plate, chromate, black
Weight	150 g
Product Composition	Mount bracket ·····2, Joint bracket ·····1
Accessory	Unit mounting screw ·····1 set

■APPEARANCE

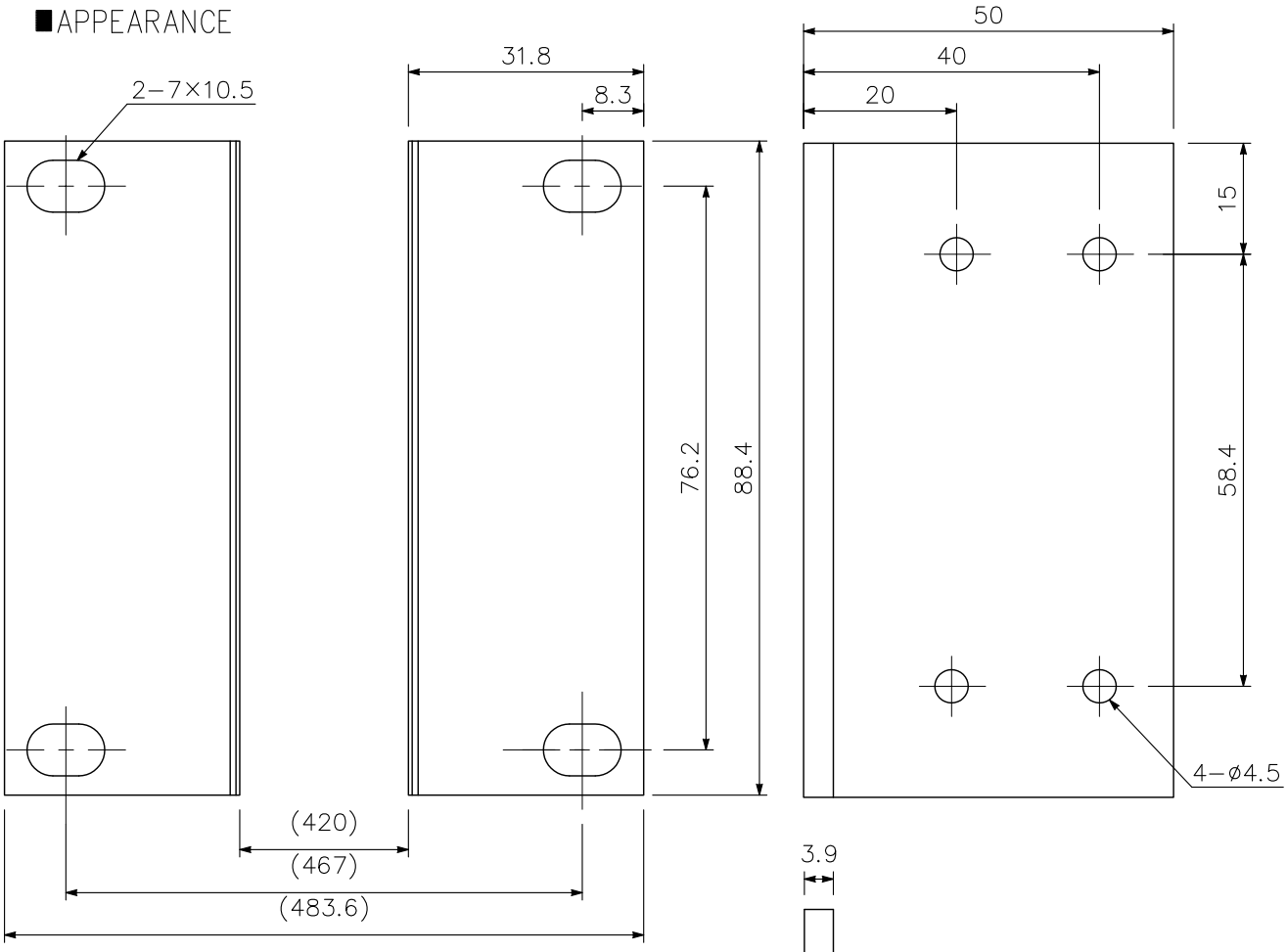

Rack Mounting Bracket

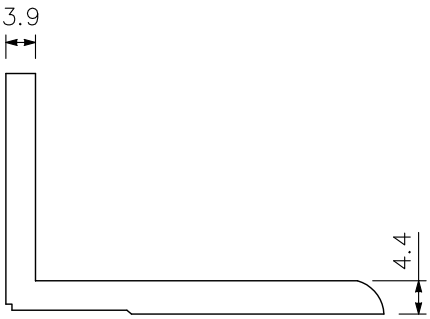

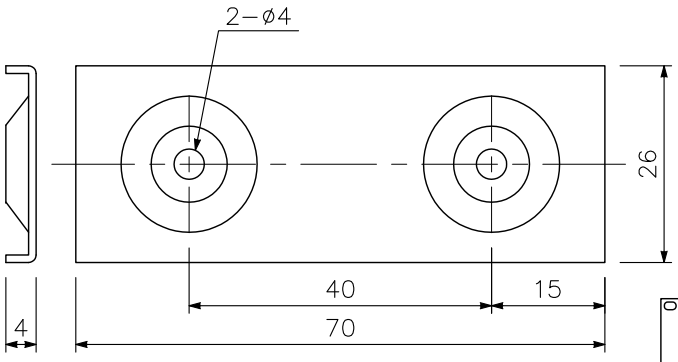

Joint Bracket

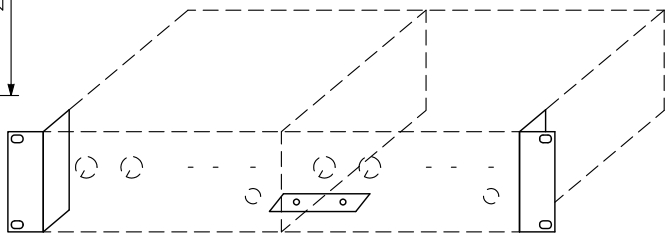

How to use joint brackets

UNIT: mm SCALE: 1/1

TOA Corporation

DWG No: GMB014A1-2